蝶　阀

应用

这一款卫生型、自动型或手动型操作的蝶阀，广泛应用于啤酒、饮料、乳品、果汁、制药、生物工程等众领域。

优点

- 全进口密封件：A、卫生条件通过FDA认证；B、有较强的耐酸、碱和耐高温性能；C、永久压缩变形小
- 精密锻造阀芯：耐压≤1.2MPa，不弯曲；金相结构优于精密铸件
- 外观设计：与国际最新款式同步
- 使用寿命：可与进口蝶阀媲美；密封件正常使用质保18个月
- 性能价格比：替代进口、节约成本、运行可靠

材质

- 产品与介质接触部分：304或316L
- 密封材料：
  标配：三元乙丙橡胶(EPDM)
  另选：硅橡胶(SILICON)、氟橡胶(FKM)、氢化丁腈橡胶(HNBR)

连接方式

- 焊接式、螺纹式、卡箍式、螺焊式、对夹式
- 与管道或设备连接的方式均按DIN11850、IDF/ISO、SMS国际标准尺寸制造，保障与进口设备的连接和互换

手柄

- 标配：金属手柄，增强尼龙手柄
- 选配：可调节手柄；按用户要求定做

气动头特征

- 常开型（NO）弹簧开/气关
- 常闭型（NC）弹簧关/气开



- 带有开/关信号反馈的感应探头选择
- 外形紧凑，体积小，扭力大
- 安装简单、方便

技术参数

- 口径范围：DN25~DN200　1"~4"
- 耐受压力：10bar
- 供给压缩空气：最小：4bar
  最大：8bar
- 气动头扭矩：40Nm
- 光洁度：切削：Ra1.6~3.2mm
  抛光：Ra0.4~0.8mm

执行器使用压缩空气质量要求

- 压缩空气连接：空气管配备空气接头R1/8"
- 最大颗粒尺寸：0.01mm
- 最大油含量：0.08ppm
- 露点：大气温度以下10℃或更低
- 最大水含量：7.5g/kg



Butterfly Valve

Application

- This sanitary type,automatic type or manual operated butterfly valves are suitable for all kinds of the stainless steel pipeline system.

Advantages

- Imported seals:A.Passed FDA certification;B.better acid proof,alkali proof and high temperature performance;C. Less permanent compressive deform.
- Investment forging valve plug:
  Pressure durability≤1.2Mpa
  Metallographic structure better than casting ones
- Apparent design:
  In the same step with international fashion-style
- Service life:The same as imported butterfly valve;18 months quality guarantee on seal under normal circumstance
- Cost performance:Import substituted,cost saved,reliable operation

Material

- Material Contact Parts:304 or 316L
- Sealing material:standard EPDM,Silicon, FKM,HNBR for option

Joint Style

- weld,thread,clamp,weld/thread,flange
- To assure the connection and substitution with imported facilities,all the connection styles with pipe or equipment are made to DIN 11850,IDF/ ISO,SMS,international standard size

Handle

- Standard:reinforced nylon handle,metal handle
- Option:adjustable handle

Pneumatic Actuator Features

- NO spring open/pneumatic off
- NC spring off/pneumatic open



- ON/OFF signal feed back inductive prober for option
- Compact appearance,small volume,large torgue
- Simple and convenient assembly

Technical Parameter

- OD Range:DN25-DN200 1"~4"
- Anti-pressure:10bar
- Compressed air supply:Min :4bar
  Max:8bar
- Pneumatic actuator torgne:40Nm
- Finish:Cutting:Ra1.6~3.2mm
  Polish :Ra0.4~0.8mm

Requirements For Compressed Air Quality That The Executor Needs

- Compressed air joint:air pipe equiped equips with air adapter R1/8"
- Max grain size:0.01mm
- Max oil content:0.08ppm
- Dew point:below 10℃ or less
- Max water content:7.5g/kg



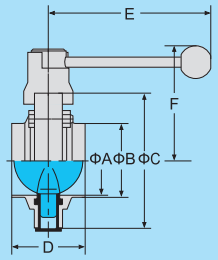

焊接式手动蝶阀
型号type：DDSX-01
Welded Butterfly Valve

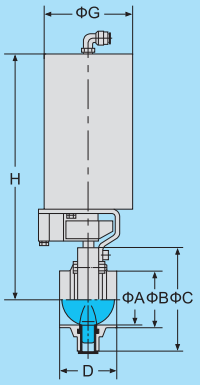

焊接式气动蝶阀
型号type：DDQX-01
Welded Pneumatic Butterfly Valve

规格size	A	B	C	D	E	F	G	H	kg
DN15	15	18	69	50	120	83	63.5	180	
20	19	22	69	50	120	83	63.5	180	
25	25	28	78	50	120	87	63.5	180	
32	31	34	84	50	120	90	63.5	180	
40	37	40	91	50	120	94	85	235	
50	49	52	104	50	120	100	85	240	
65	66	70	125	55	140	110	85	250	
80	81	85	143	65	165	120	85	260	
100	100	104	161	80	165	130	108	305	
125	125	129	192	80	200	145	108	310	
150	150	154	221	85	200	160	133	420	
200	200	204	280	90	230	190	133	450	

注：信号反馈装置为可以配置选项
Signal feed back device can be choosed or not.

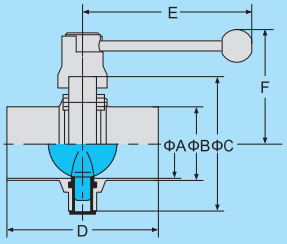

加长型焊接式手动蝶阀
型号type：DDSX-02
Long Welded Butterfly Valve

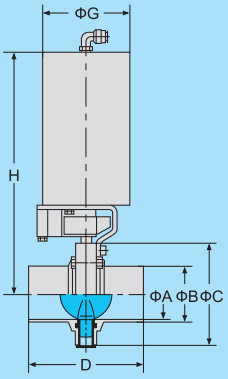

加长型焊接式气动蝶阀
型号type：DDQX-02
Long Welded Pneumatic Butterfly Valve

规格size	A	B	C	D	E	F	G	H	kg
DN15	15	18	69	86	120	83	63.5	180	
20	19	22	69	86	120	83	63.5	180	
25	25	28	78	86	120	87	63.5	180	
32	31	34	84	96	120	90	63.5	180	
40	37	40	91	96	120	94	85	235	
50	49	52	104	96	120	100	85	240	
65	66	70	125	124	140	110	85	250	
80	81	85	143	124	165	120	85	260	
100	100	104	161	124	165	130	108	305	
125	125	129	192	124	200	145	108	310	
150	150	154	221	124	200	160	133	420	
200	200	204	280	130	230	190	133	450	

注：信号反馈装置为可以配置选项
Signal feed back device can be choosed or not.

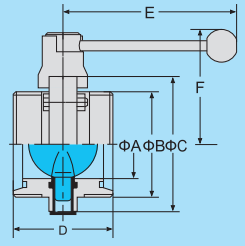

螺纹式手动蝶阀
型号type：DDSX-03
Male Butterfly Valve

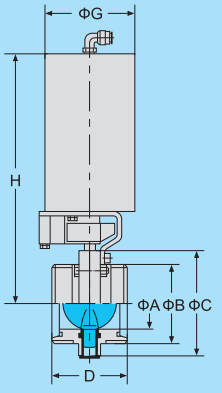

螺纹式气动蝶阀
型号type：DDQX-03
Male Pneumatic Butterfly Valve

规格size	A	B	C	D	E	F	G	H	kg
DN15	15	Rd34×1/8"	69	68	120	83	63.5	180	
20	19	Rd44×1/6"	69	68	120	83	63.5	180	
25	25	Rd52×1/6"	78	70	120	87	63.5	180	
32	31	Rd58×1/6"	84	70	120	90	63.5	180	
40	37	Rd65×1/6"	91	70	120	94	85	235	
50	49	Rd78×1/6"	104	74	120	100	85	240	
65	66	Rd95×1/6"	125	85	140	110	85	250	
80	81	Rd110×1/4"	143	85	165	120	85	260	
100	100	Rd130×1/4"	161	85	165	130	108	305	
125	125	Rd160×1/4"	192	151	200	145	108	310	
150	150	Rd190×1/4"	221	185	200	160	133	420	

注：信号反馈装置为可以配置选项
Signal feed back device can be choosed or not.

样本所示管径为DIN11850第一系列尺寸，可按客户要求提供第二系列尺寸的产品。
The sizes marked in the handbook is DIN11850 NO.1 serie, No.2 serie products can also be offered by LYSF.

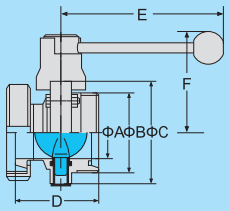

活接式手动蝶阀
型号type：DDSX-04
Male/Nut Butterfly Valve

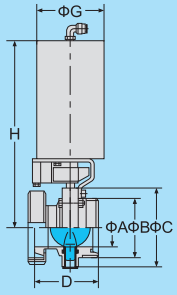

活接式气动蝶阀
型号type：DDQX-04
Male/Nut Pneumatic Butterfly Valve

规格size	A	B	C	D	E	F	G	H	kg
DN15	15	Rd34×1/8"	69	72	120	83	63.5	180	
20	19	Rd44×1/6"	69	72	120	83	63.5	180	
25	25	Rd52×1/6"	78	75	120	87	63.5	180	
32	31	Rd58×1/6"	84	75	120	90	63.5	180	
40	37	Rd65×1/6"	91	75	120	94	85	235	
50	49	Rd78×1/6"	104	78	120	100	85	240	
65	66	Rd95×1/6"	125	87	135	110	85	250	
80	81	Rd110×1/4"	143	92	165	120	85	260	
100	100	Rd130×1/4"	161	102.5	165	130	108	305	
125	125	Rd160×1/4"	192	139	200	145	108	310	
150	150	Rd190×1/4"	221	172	200	160	133	420	

注：信号反馈装置为可以配置选项
Signal feed back device can be choosed or not.

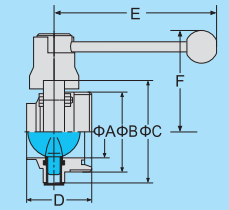

螺焊式手动蝶阀
型号type：DDSX-05
Male/Welding Butterfly Valve

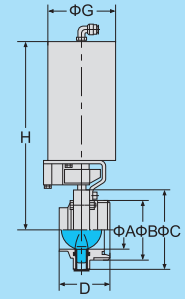

螺焊式气动蝶阀
型号type：DDQX-05
Male/Welding Pneumatic Butterfly Valve

规格size	A	B	C	D	E	F	G	H	kg
DN15	15	Rd34×1/8"	69	59	120	83	63.5	180	
20	19	Rd44×1/6"	69	59	120	83	63.5	180	
25	25	Rd52×1/6"	78	60	120	87	63.5	180	
32	31	Rd58×1/6"	84	60	120	90	63.5	180	
40	37	Rd65×1/6"	91	60	120	94	85	235	
50	49	Rd78×1/6"	104	62	120	100	85	240	
65	66	Rd95×1/6"	125	70	135	110	85	250	
80	81	Rd110×1/4"	143	75	165	120	85	260	
100	100	Rd130×1/4"	161	82.5	165	130	108	305	
125	125	Rd160×1/4"	192	115.5	200	145	108	310	
150	150	Rd190×1/4"	221	145	200	160	133	420	

注：信号反馈装置为可以配置选项
Signal feed back device can be choosed or not.

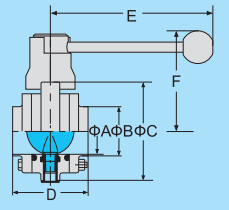

对夹式手动蝶阀
型号type：DDSX-06
Flange Butterfly Valve

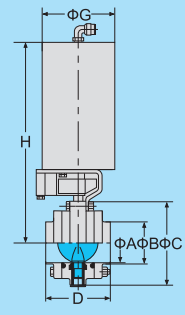

对夹式气动蝶阀
型号type：DDQX-06
Flange Pneumatic Butterfly Valve

规格size	A	B	C	D	E	F	G	H	kg
DN15	15	18	69	70	120	83	63.5	180	
20	19	22	69	70	120	83	63.5	180	
25	25	28	78	70	120	87	63.5	180	
32	31	34	84	70	120	90	63.5	180	
40	37	40	91	75	120	94	85	235	
50	49	52	104	80	120	100	85	240	
65	66	70	125	82	135	110	85	250	
80	81	85	143	85	165	120	85	260	
100	100	104	161	85	165	130	108	305	
125	125	129	192	95	200	145	108	310	
150	150	154	221	106	200	160	133	420	
200	200	204	280	116	230	190	133	450	

注：信号反馈装置为可以配置选项
Signal feed back device can be choosed or not.

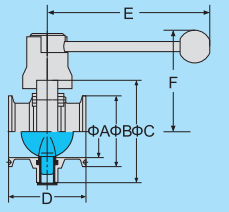

卡箍式手动蝶阀
型号type：DDSX-07
Clamp Butterfly Valve

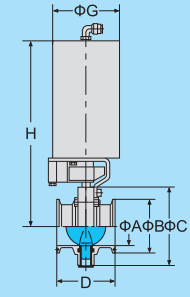

卡箍式气动蝶阀
型号type：DDQX-07
Clamp Pneumatic Butterfly Valve

规格size	A	B	C	D	E	F	G	H	kg
DN15	15	34	69	70	120	83	63.5	180	
20	18	34	69	70	120	83	63.5	180	
25	25	50.5	78	70	120	87	63.5	180	
32	31	50.5	84	70	120	90	63.5	180	
40	37	50.5	91	70	120	94	85	235	
50	49	64	104	70	120	100	85	240	
65	66	91	125	75	135	110	85	250	
80	81	106	143	85	165	120	85	260	
100	100	119	161	85	165	130	108	305	

注：信号反馈装置为可以配置选项
Signal feed back device can be choosed or not.

样本所示管径为DIN11850第一系列尺寸，可按客户要求提供第二系列尺寸的产品。
The sizes marked in the handbook is DIN11850 NO.1 serie, No.2 serie products can also be offered by LYSF.

焊式气动蝶阀(卧式) 型号type：DDQX-11 Welded Pneumatic Butterfly Valve

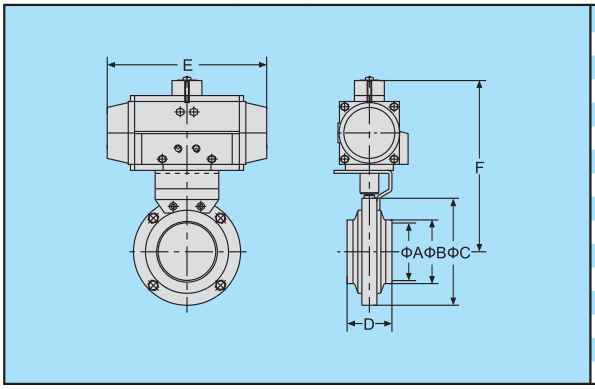

规格size	A	B	C	D	E	F	kg
DN15	15	18	69	50	155	168	
20	19	22	69	50	155	168	
25	25	28	78	50	155	174	
32	31	34	84	50	155	174	
40	37	40	91	50	155	181	
50	49	52	104	50	168	205	
65	66	70	125	55	168	215	
80	81	85	143	65	219	241	
100	100	104	161	80	249	263	
125	125	129	192	80	274	291	
150	150	154	221	85	355	343	
200	200	204	280	90	355	374	

注：信号反馈装置为可以配置选项
Signal feed back device can be choosed or not.

螺式气动蝶阀(卧式) 型号type：DDQX-12 Male Pneumatic Butterfly Valve

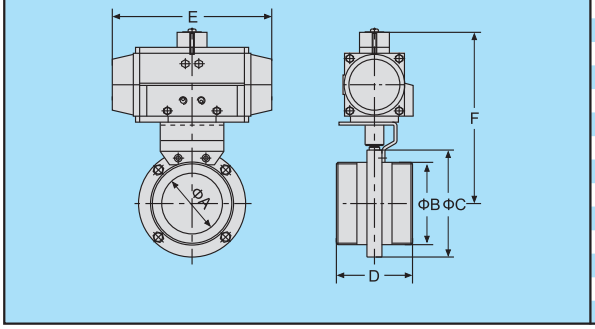

规格size	A	B	C	D	E	F	kg
DN15	15	Rd34×1/8"	69	68	155	168	
20	19	Rd44×1/6"	69	68	155	168	
25	25	Rd52×1/6"	78	70	155	174	
32	31	Rd58×1/6"	84	70	155	174	
40	37	Rd65×1/6"	91	70	155	181	
50	49	Rd78×1/6"	104	74	168	205	
65	66	Rd95×1/6"	125	85	168	215	
80	81	Rd110×1/4"	143	85	219	241	
100	100	Rd130×1/4"	161	85	249	263	
125	125	Rd160×1/4"	192	151	274	291	
150	150	Rd190×1/4"	221	185	355	343	

注：信号反馈装置为可以配置选项
Signal feed back device can be choosed or not.

对夹式气动蝶阀(卧式) 型号type：DDQX-13 Flange Pneumatic Butterfly Valve

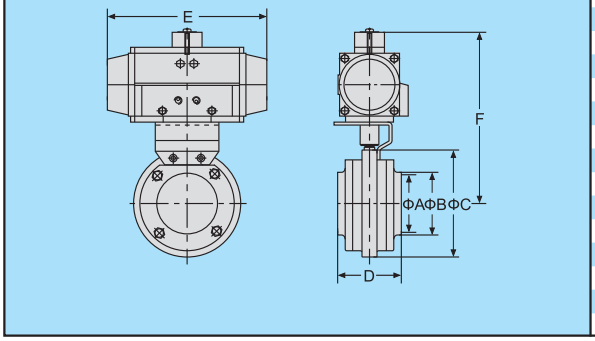

规格size	A	B	C	D	E	F	kg
DN15	15	18	69	70	155	168	
20	19	22	69	70	155	168	
25	25	28	78	70	155	174	
32	31	34	84	70	155	174	
40	37	40	91	75	155	181	
50	49	52	104	80	168	205	
65	66	70	125	82	168	215	
80	81	85	143	85	219	241	
100	100	104	161	85	249	263	
125	125	129	192	95	274	291	
150	150	154	221	106	355	343	
200	200	204	280	116	355	374	

注：信号反馈装置为可以配置选项
Signal feed back device can be choosed or not.

卡式气动蝶阀(卧式) 型号type：DDQX-14 Clamp Pneumatic Butterfly Valve

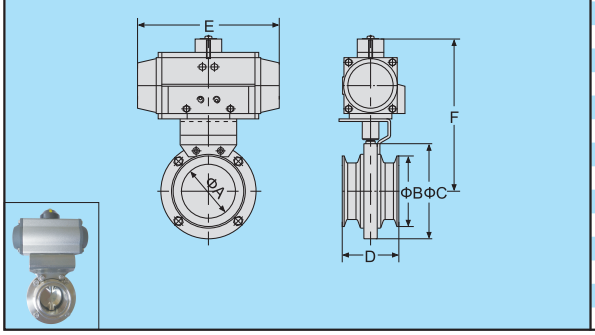

规格size	A	B	C	D	E	F	kg
DN15	15	34	69	70	155	168	
20	18	34	69	70	155	168	
25	25	50.5	78	70	155	174	
32	31	50.5	84	70	155	174	
40	37	50.5	91	70	155	181	
50	49	64	104	70	168	205	
65	66	91	125	75	168	215	
80	81	106	143	85	219	241	
100	100	119	161	85	249	263	

注：信号反馈装置为可以配置选项
Signal feed back device can be choosed or not.

样本所示管径为DIN11850第一系列尺寸，可按客户要求提供第二系列尺寸的产品。
The sizes marked in the handbook is DIN11850 NO.1 serie, No.2 serie products can also be offered by LYSF.

焊式电动蝶阀 型号type：DDDX-01 Welded Electric Butterfly Valve

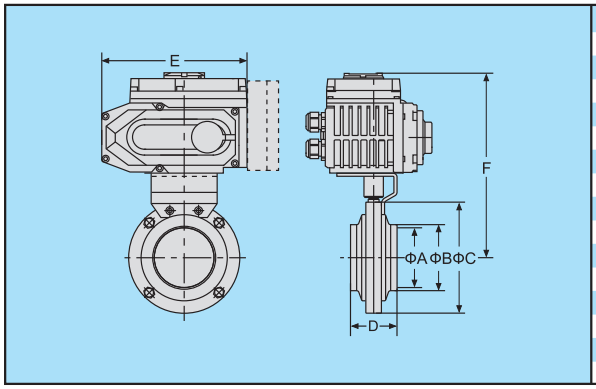

规格size	A	B	C	D	E	F	kg
DN15	15	18	69	50	123	198	
20	19	22	69	50	123	198	
25	25	28	78	50	123	198	
32	31	34	84	50	123	198	
40	37	40	91	50	123	205	
50	49	52	104	50	123	213	
65	66	70	125	55	160	231	
80	81	85	143	65	160	239.5	
100	100	104	161	80	189	257	
125	125	129	192	80	189	272.5	
150	150	154	221	85	189	285.5	
200	200	204	280	90	268	351.5	

注：信号反馈装置为可以配置选项
Signal feed back device can be choosed or not.

螺式电动蝶阀 型号type：DDDX-02 Male Electric Butterfly Valve

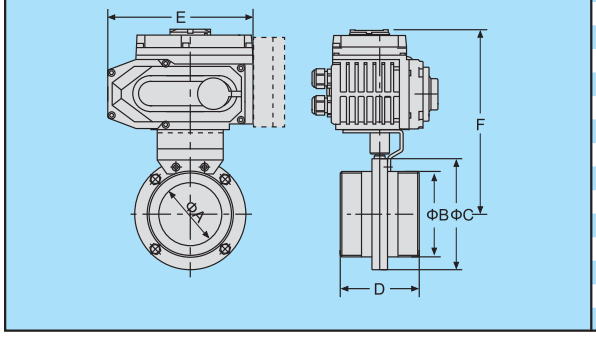

规格size	A	B	C	D	E	F	kg
DN15	15	Rd34×1/8"	69	68	123	198	
20	19	Rd44×1/6"	69	68	123	198	
25	25	Rd52×1/6"	78	70	123	198	
32	31	Rd58×1/6"	84	70	123	198	
40	37	Rd65×1/6"	91	70	123	205	
50	49	Rd78×1/6"	104	74	123	213	
65	66	Rd95×1/6"	125	85	160	231	
80	81	Rd110×1/4"	143	85	160	239.5	
100	100	Rd130×1/4"	161	85	189	257	
125	125	Rd160×1/4"	192	151	189	285.5	
150	150	Rd190×1/4"	221	185	268	351.5	

注：信号反馈装置为可以配置选项
Signal feed back device can be choosed or not.

对夹式电动蝶阀 型号type：DDDX-03 Flange Electric Butterfly Valve

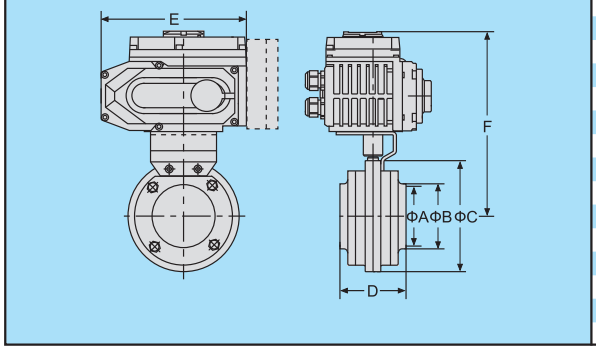

规格size	A	B	C	D	E	F	kg
DN15	15	18	69	70	123	198	
20	19	22	69	70	123	198	
25	25	28	78	70	123	198	
32	31	34	84	70	123	198	
40	37	40	91	75	123	205	
50	49	52	104	80	123	213	
65	66	70	125	82	160	231	
80	81	85	143	85	160	239.5	
100	100	104	161	85	189	257	
125	125	129	192	95	189	272.5	
150	150	154	221	106	189	285.5	
200	200	204	280	116	268	351.5	

注：信号反馈装置为可以配置选项
Signal feed back device can be choosed or not.

卡式电动蝶阀 型号type：DDDX-04 Clamp Electric Butterfly Valve

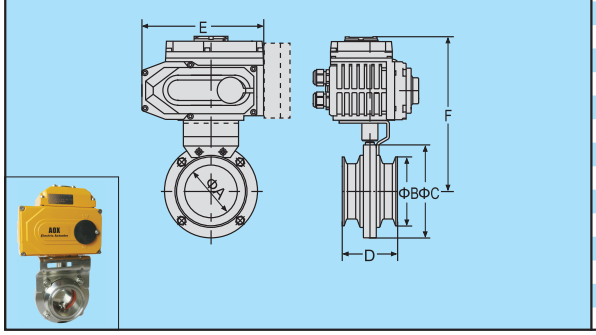

规格size	A	B	C	D	E	F	kg
DN15	15	34	69	70	123	198	
20	18	34	69	70	123	198	
25	25	50.5	78	70	123	198	
32	31	50.5	84	70	123	198	
40	37	50.5	91	70	123	205	
50	49	64	104	70	123	213	
65	66	91	125	75	160	231	
80	81	106	143	85	160	239.5	
100	100	119	161	85	189	257	

注：信号反馈装置为可以配置选项
Signal feed back device can be choosed or not.

样本所示管径为DIN11850第一系列尺寸，可按客户要求提供第二系列尺寸的产品。
The sizes marked in the handbook is DIN11850 NO.1 serie, No.2 serie products can also be offered by LYSF.

A型连杆式手动蝶阀 型号type：DDSX-08 Manual Butterfly Valve With A Type Handel

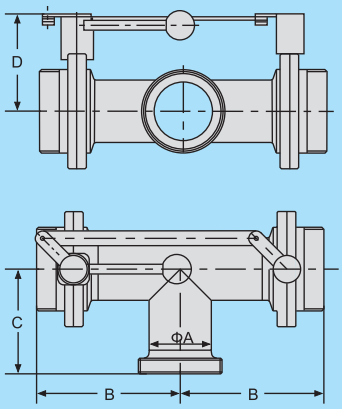

规格size	A	B	C	D	E	F	kg
DN15	18	94	52	83			
20	22	99	59	83			
25	28	110	72	87			
32	34	115	77	90			
40	40	120	82	94			
50	52	132	93	100			
65	70	150	105	110			
80	85	165	120	120			
100	104	182.5	130	130			

A型连杆式气动蝶阀 型号type：DDQX-08 Pneumatic Butterfly Valve With A Type Handel

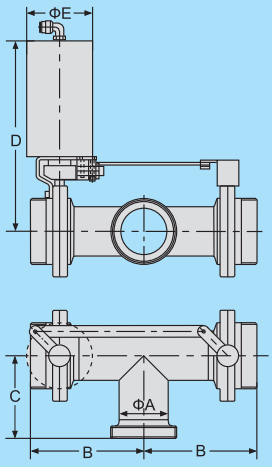

规格size	A	B	C	D	E	F	kg
DN15	18	94	52	180	63.5		
20	22	99	59	180	63.5		
25	28	110	72	180	63.5		
32	34	115	77	180	63.5		
40	40	120	82	235	85		
50	52	132	93	240	85		
65	70	150	105	250	85		
80	85	165	120	260	85		
100	104	182.5	130	305	108		

注：信号反馈装置为可以配置选项
Signal feed back device can be choosed or not.

B型连杆式手动蝶阀 型号type：DDSX-09 Manual Butterfly Valve With B Type Handel

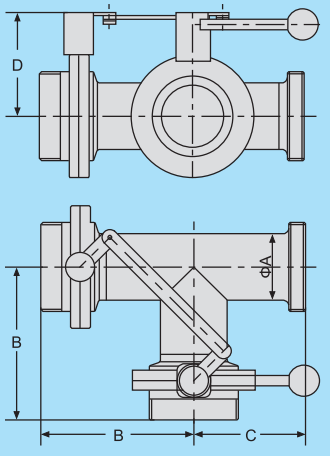

规格size	A	B	C	D	E	F	kg
DN15	18	94	52	83			
20	22	99	59	83			
25	28	110	72	87			
32	34	115	77	90			
40	40	120	82	94			
50	52	132	93	100			
65	70	150	105	110			
80	85	165	120	120			
100	104	182.5	130	130			

样本所示管径为DIN11850第一系列尺寸，可按客户要求提供第二系列尺寸的产品。
The sizes marked in the handbook is DIN11850 NO.1 serie, No.2 serie products can also be offered by LYSF.

B型连杆式气动蝶阀 型号type：DDQX-09 Pneumatic Butterfly Valve With B Type Handel

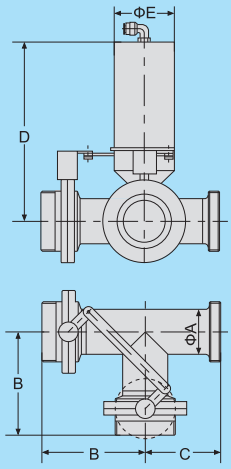

规格size	A	B	C	D	E	F	kg
DN15	18	94	52	180	63.5		
20	22	99	59	180	63.5		
25	28	110	72	180	63.5		
32	34	115	77	180	63.5		
40	40	120	82	235	85		
50	52	132	93	240	85		
65	70	150	105	250	85		
80	85	165	120	260	85		
100	104	182.5	130	305	108		

注：信号反馈装置为可以配置选项
Signal feed back device can be choosed or not.

C型连杆式手动蝶阀 型号type：DDSX-10 Manual Butterfly Valve With C Type Handel

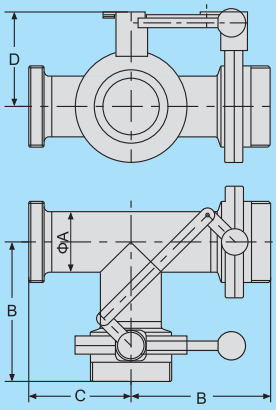

规格size	A	B	C	D	E	F	kg
DN15	18	94	52	83			
20	22	99	59	83			
25	28	110	72	87			
32	34	115	77	90			
40	40	120	82	94			
50	52	132	93	100			
65	70	150	105	110			
80	85	165	120	120			
100	104	182.5	130	130			

C型连杆式气动蝶阀 型号type：DDQX-10 Pneumatic Butterfly Valve With C Type Handel

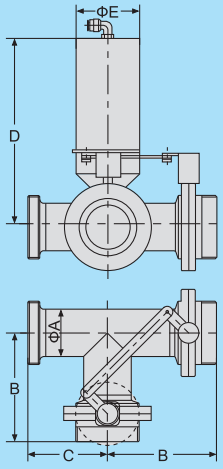

规格size	A	B	C	D	E	F	kg
DN15	18	94	52	180	63.5		
20	22	99	59	180	63.5		
25	28	110	72	180	63.5		
32	34	115	77	180	63.5		
40	40	120	82	235	85		
50	52	132	93	240	85		
65	70	150	105	250	85		
80	85	165	120	260	85		
100	104	182.5	130	305	108		

注：信号反馈装置为可以配置选项
Signal feed back device can be choosed or not.

样本所示管径为DIN11850第一系列尺寸，可按客户要求提供第二系列尺寸的产品。
The sizes marked in the handbook is DIN11850 NO.1 serie, No.2 serie products can also be offered by LYSF.

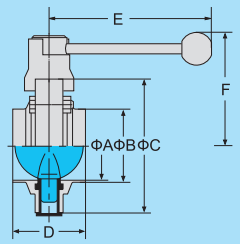

焊接式手动蝶阀
型号type：IDSX-01
Welded Butterfly Valve

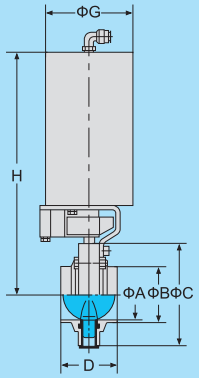

焊接式气动蝶阀
型号type：IDQX-01
Welded Pneumatic Butterfly Valve

规格size	A	B	C	D	E	F	G	H	kg
3/4"	16	19	69	50	120	74	63.5	180	
1"	22.4	25.4	69	50	120	74	63.5	180	
1.25"	29	32	78	50	120	76	63.5	180	
1.5"	35	38	86	50	120	79	85	228	
2"	48	51	94	50	120	86	85	235	
2.5"	59.5	63.5	117	50	140	96	85	245	
3"	72.1	76.1	130	60	140	106	85	255	
3.5"	85	89	143	65	165	109	85	260	
4"	97.6	101.6	163	80	165	120	108	305	

注：信号反馈装置为可以配置选项
Signal feed back device can be choosed or not.

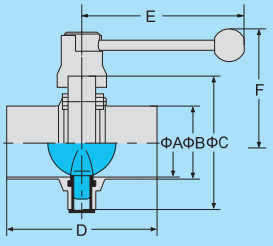

加长型焊接式手动蝶阀
型号type：IDSX-02
Long Welded Butterfly Valve

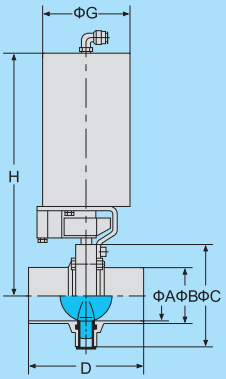

加长型焊接式气动蝶阀
型号type：IDQX-02
Long Welded Pneumatic Butterfly Valve

规格size	A	B	C	D	E	F	G	H	kg
3/4"	16	19	69	82	120	74	63.5	180	
1"	22.4	25.4	69	82	120	74	63.5	180	
1.25"	29	32	78	96	120	76	63.5	180	
1.5"	35	38	86	96	120	79	85	228	
2"	48	51	94	96	120	86	85	235	
2.5"	59.5	63.5	117	96	140	96	85	245	
3"	72.1	76.1	130	124	140	106	85	255	
3.5"	85	89	143	124	165	109	85	260	
4"	97.6	101.6	163	124	165	120	108	305	

注：信号反馈装置为可以配置选项
Signal feed back device can be choosed or not.

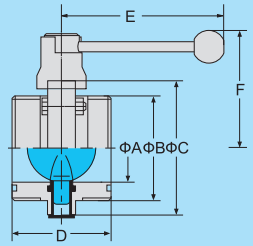

螺纹式手动蝶阀
型号type：IDSX-03
Male Butterfly Valve

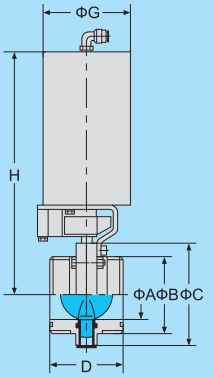

螺纹式气动蝶阀
型号type：IDQX-03
Male Pneumatic Butterfly Valve

规格size	A	B	C	D	E	F	G	H	kg
3/4"	16	Rd34×1/8"	69	68	120	74	63.5	180	
1"	22.4	Rd40×1/6"	69	68	120	74	63.5	180	
1.25"	29	Rd48×1/6"	78	68	120	76	63.5	180	
1.5"	35	Rd60×1/6"	86	68	120	79	85	228	
2"	48	Rd70×1/6"	94	70	120	86	85	235	
2.5"	59.5	Rd85×1/6"	117	75	140	96	85	245	
3"	72.1	Rd98×1/6"	130	80	140	106	85	255	
3.5"	85	Rd110×1/6"	143	85	165	109	85	260	
4"	97.6	Rd132×1/6"	163	85	165	120	108	305	

注：信号反馈装置为可以配置选项
Signal feed back device can be choosed or not.

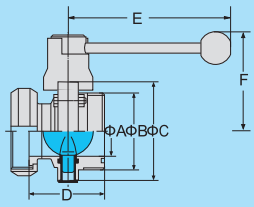

活接式手动蝶阀
型号type：IDSX-04
Male/Nut Butterfly Valve

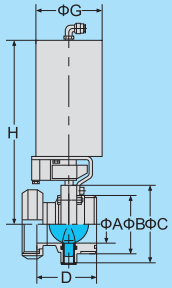

活接式气动蝶阀
型号type：IDQX-04
Male/Nut Pneumatic Butterfly Valve

规格size	A	B	C	D	E	F	G	H	kg
3/4"	16	Rd34×1/8"	69	71	120	74	63.5	180	
1"	22.4	Rd40×1/6"	69	71	120	74	63.5	180	
1.25"	29	Rd48×1/6"	78	71	120	76	63.5	180	
1.5"	35	Rd60×1/6"	86	71	120	79	85	228	
2"	48	Rd70×1/6"	94	72	120	86	85	235	
2.5"	59.5	Rd85×1/6"	117	76.5	140	96	85	245	
3"	72.1	Rd98×1/6"	130	85	140	106	85	255	
3.5"	85	Rd110×1/6"	143	90	165	109	85	260	
4"	97.6	Rd132×1/6"	163	98.5	165	120	108	305	

注：信号反馈装置为可以配置选项
Signal feed back device can be choosed or not.

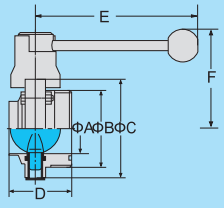

螺焊式手动蝶阀
型号type：IDSX-05
Male/Welding Butterfly Valve

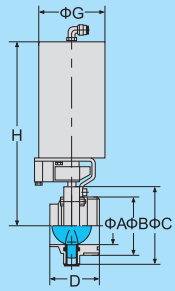

螺焊式气动蝶阀
型号type：IDQX-05
Male/Welding Pneumatic Butterfly Valve

规格size	A	B	C	D	E	F	G	H	kg
3/4"	16	Rd34×1/8"	69	59	120	90	63.5	180	
1"	22.4	Rd40×1/6"	69	59	120	90	63.5	180	
1.25"	29	Rd48×1/6"	78	59	120	94	63.5	180	
1.5"	35	Rd60×1/6"	86	59	120	95	85	228	
2"	48	Rd70×1/6"	94	60	120	103	85	235	
2.5"	59.5	Rd85×1/6"	117	62.5	140	113	85	245	
3"	72.1	Rd98×1/6"	130	70	140	120	85	255	
3.5"	85	Rd110×1/6"	143	75	165	123	85	260	
4"	97.6	Rd132×1/6"	163	82.5	165	136	108	305	

注：信号反馈装置为可以配置选项
Signal feed back device can be choosed or not.

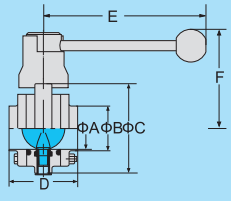

对夹式手动蝶阀
型号type：IDSX-06
Flange Butterfly Valve

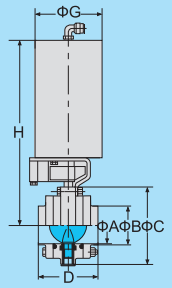

对夹式气动蝶阀
型号type：IDQX-06
Flange Pneumatic Butterfly Valve

规格size	A	B	C	D	E	F	G	H	kg
3/4"	16	19	69	70	120	74	63.5	180	
1"	22.4	25.4	69	70	120	74	63.5	180	
1.25"	29	32	78	70	120	76	63.5	180	
1.5"	35	38	86	75	120	79	85	228	
2"	48	51	94	80	120	86	85	235	
2.5"	59.5	63.5	117	82	140	96	85	245	
3"	72.1	76.1	130	85	140	106	85	255	
3.5"	85	89	143	85	165	109	85	260	
4"	97.6	101.6	163	85	165	120	108	305	

注：信号反馈装置为可以配置选项
Signal feed back device can be choosed or not.

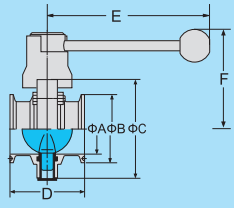

卡箍式手动蝶阀
型号type：IDSX-07
Clamp Butterfly Valve

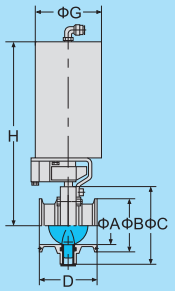

卡箍式气动蝶阀
型号type：IDQX-07
Clamp Pneumatic Butterfly Valve

规格size	A	B	C	D	E	F	G	H	kg
3/4"	16	25.4	69	70	120	74	63.5	180	
1"	22.4	50.5	69	70	120	74	63.5	180	
1.25"	29	50.5	78	68	120	76	63.5	180	
1.5"	35	50.5	86	60	120	79	85	228	
2"	48	64	94	60	120	86	85	235	
2.5"	59.5	77.5	117	75	140	96	85	245	
3"	72.1	91	130	80	140	106	85	255	
3.5"	85	106	143	85	165	109	85	260	
4"	97.6	119	163	85	165	120	108	305	

注：信号反馈装置为可以配置选项
Signal feed back device can be choosed or not.

焊式气动蝶阀(卧式) 型号type：IDQX-14 Welded Pneumatic Butterfly Valve

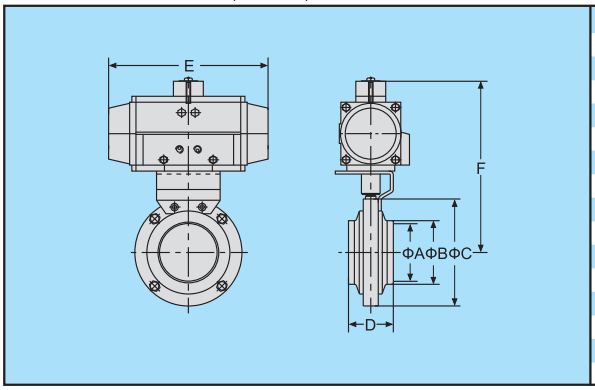

规格size	A	B	C	D	E	F	kg
3/4"	16	19	69	50	155	168	
1"	22.4	25.4	69	50	155	168	
1.25"	29	32	78	50	155	174	
1.5"	35	38	86	50	155	179	
2"	48	51	94	50	168	200	
2.5"	59.5	63.5	117	50	168	211	
3"	72.1	76.1	130	60	168	218	
3.5"	85	89	143	65	249	241	
4"	97.6	101.6	163	80	249	263	

注：信号反馈装置为可以配置选项
Signal feed back device can be choosed or not.

螺式气动蝶阀(卧式) 型号type：IDQX-15 Male Pneumatic Butterfly Valve

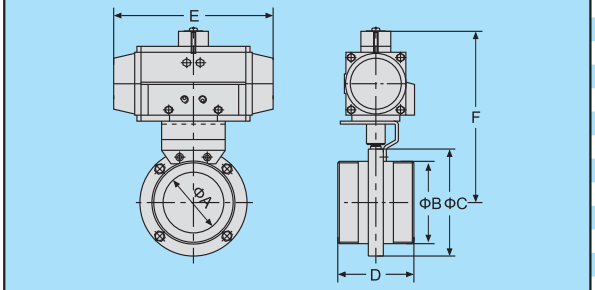

规格size	A	B	C	D	E	F	kg
3/4"	16	Rd34×1/8"	69	59	155	168	
1"	22.4	Rd40×1/6"	69	59	155	168	
1.25"	29	Rd48×1/6"	78	59	155	174	
1.5"	35	Rd60×1/6"	86	59	155	179	
2"	48	Rd70×1/6"	94	60	168	200	
2.5"	59.5	Rd85×1/6"	117	62.5	168	211	
3"	72.1	Rd98×1/6"	130	70	168	218	
3.5"	85	Rd110×1/6"	143	75	249	241	
4"	97.6	Rd132×1/6"	163	82.5	249	263	

注：信号反馈装置为可以配置选项
Signal feed back device can be choosed or not.

对夹式气动蝶阀(卧式) 型号type：IDQX-16 Flange Pneumatic Butterfly Valve

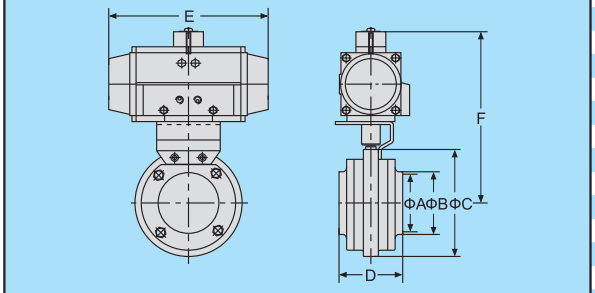

规格size	A	B	C	D	E	F	kg
3/4"	16	19	69	70	155	168	
1"	22.4	25.4	69	70	155	168	
1.25"	29	32	78	70	155	174	
1.5"	35	38	86	75	155	179	
2"	48	51	94	80	168	200	
2.5"	59.5	63.5	117	82	168	211	
3"	72.1	76.1	130	85	168	218	
3.5"	85	89	143	85	249	241	
4"	97.6	101.6	163	85	249	263	

注：信号反馈装置为可以配置选项
Signal feed back device can be choosed or not.

卡式气动蝶阀(卧式) 型号type：IDQX-17 Clamp Pneumatic Butterfly Valve

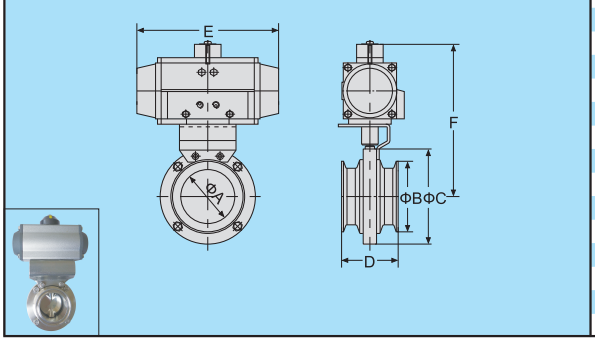

规格size	A	B	C	D	E	F	kg
3/4"	16	25.4	69	70	155	168	
1"	22.4	50.5	69	70	155	168	
1.25"	29	50.5	78	68	155	174	
1.5"	35	50.5	86	60	155	179	
2"	48	64	94	60	168	200	
2.5"	59.5	77.5	117	75	168	211	
3"	72.1	91	130	80	168	218	
3.5"	85	106	143	85	249	241	
4"	97.6	119	163	85	249	263	

注：信号反馈装置为可以配置选项
Signal feed back device can be choosed or not.

焊式电动蝶阀 型号type：IDDX-01 Welded Electric Butterfly Valve

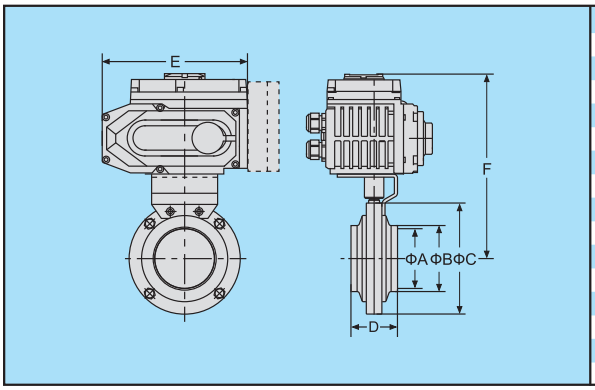

规格size	A	B	C	D	E	F	kg
3/4"	16	19	69	50	123	192	
1"	22.4	25.4	69	50	123	192	
1.25"	29	32	78	50	123	198	
1.5"	35	38	86	50	123	203	
2"	48	51	94	50	123	208	
2.5"	59.5	63.5	117	50	160	227	
3"	72.1	76.1	130	60	160	234	
3.5"	85	89	143	65	160	239.5	
4"	97.6	101.6	163	80	189	257	

注：信号反馈装置为可以配置选项
Signal feed back device can be choosed or not.

螺式电动蝶阀 型号type：IDDX-02 Male Electric Butterfly Valve

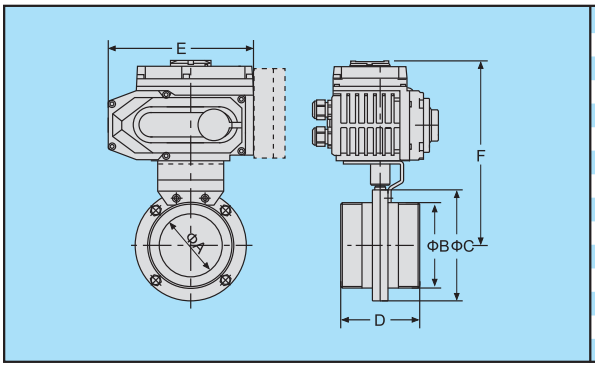

规格size	A	B	C	D	E	F	kg
3/4"	16	Rd34×1/8"	69	59	123	192	
1"	22.4	Rd40×1/6"	69	59	123	192	
1.25"	29	Rd48×1/6"	78	59	123	198	
1.5"	35	Rd60×1/6"	86	59	123	203	
2"	48	Rd70×1/6"	94	60	123	208	
2.5"	59.5	Rd85×1/6"	117	62.5	160	227	
3"	72.1	Rd98×1/6"	130	70	160	234	
3.5"	85	Rd110×1/6"	143	75	160	239.5	
4"	97.6	Rd132×1/6"	163	82.5	189	257	

注：信号反馈装置为可以配置选项
Signal feed back device can be choosed or not.

对夹式电动蝶阀 型号type：IDDX-03 Flange Electric Butterfly Valve

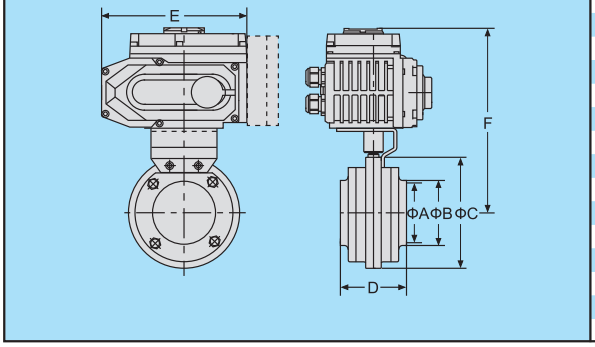

规格size	A	B	C	D	E	F	kg
3/4"	16	19	69	70	123	192	
1"	22.4	25.4	69	70	123	192	
1.25"	29	32	78	70	123	198	
1.5"	35	38	86	75	123	203	
2"	48	51	94	80	123	208	
2.5"	59.5	63.5	117	82	160	227	
3"	72.1	76.1	130	85	160	234	
3.5"	85	89	143	85	160	239.5	
4"	97.6	101.6	163	85	189	257	

注：信号反馈装置为可以配置选项
Signal feed back device can be choosed or not.

卡式电动蝶阀 型号type：IDDX-04 Clamp Electric Butterfly Valve

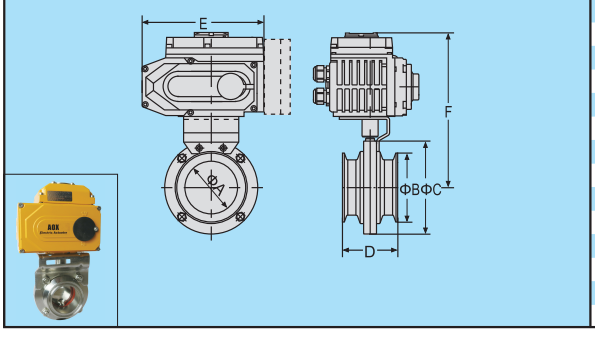

规格size	A	B	C	D	E	F	kg
3/4"	16	25.4	69	70	123	192	
1"	22.4	50.5	69	70	123	192	
1.25"	29	50.5	78	68	123	198	
1.5"	35	50.5	86	60	123	203	
2"	48	64	94	60	123	208	
2.5"	59.5	77.5	117	75	160	227	
3"	72.1	91	130	80	160	234	
3.5"	85	106	143	85	160	239.5	
4"	97.6	119	163	85	189	257	

注：信号反馈装置为可以配置选项
Signal feed back device can be choosed or not.

A型连杆式手动蝶阀　型号type：IDSX-11　Manual Butterfly Valve With A Type Handel

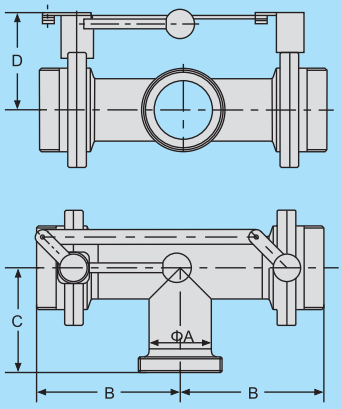

规格size	A	B	C	D	E	F	kg
1s	25.4	92.5	48.5	85			
1.5s	38.1	107.5	68.5	92			
2s	50.8	120.5	80.5	100			
2.5s	63.5	146	107.5	105			
3s	76.1	158.5	112.5	115			
4s	101.6	209.5	157	130			

A型连杆式气动蝶阀　型号type：IDQX-11　Pneumatic Butterfly Valve With A Type Handel

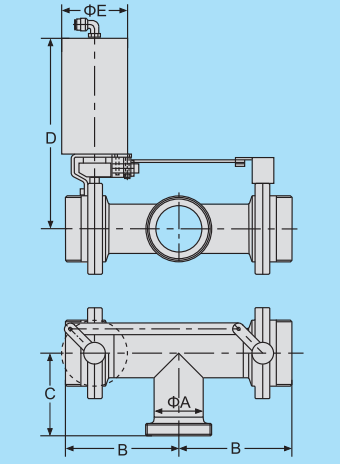

规格size	A	B	C	D	E	F	kg
1s	25.4	92.5	48.5	180	63.5		
1.5s	38.1	107.5	68.5	228	85		
2s	50.8	120.5	80.5	235	85		
2.5s	63.5	146	107.5	245	85		
3s	76.1	158.5	112.5	255	85		
4s	101.6	209.5	157	305	108		

注：信号反馈装置为可以配置选项
Signal feed back device can be choosed or not.

B型连杆式手动蝶阀　型号type：IDSX-12　Manual Butterfly Valve With B Type Handel

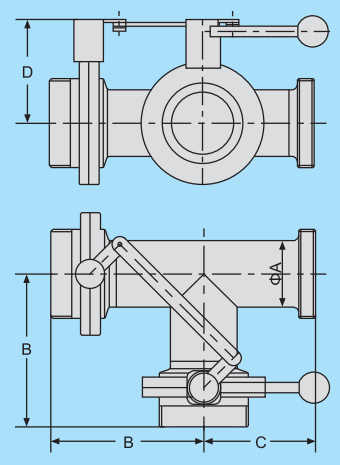

规格size	A	B	C	D	E	F	kg
1s	25.4	92.5	48.5	85			
1.5s	38.1	107.5	68.5	92			
2s	50.8	120.5	80.5	100			
2.5s	63.5	146	107.5	105			
3s	76.1	158.5	112.5	115			
4s	101.6	209.5	157	130			

B型连杆式气动蝶阀 型号type：IDQX-12 Pneumatic Butterfly Valve With B Type Handel

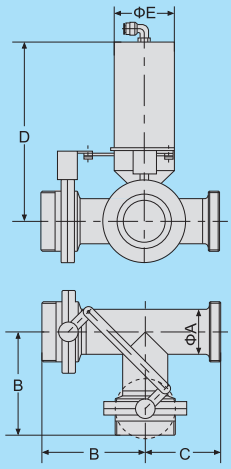

规格size	A	B	C	D	E	F	kg
1s	25.4	92.5	48.5	180	63.5		
1.5s	38.1	107.5	68.5	228	85		
2s	50.8	120.5	80.5	235	85		
2.5s	63.5	146	107.5	245	85		
3s	76.1	158.5	112.5	255	85		
4s	101.6	209.5	157	305	108		

注：信号反馈装置为可以配置选项
Signal feed back device can be choosed or not.

C型连杆式手动蝶阀 型号type：IDSX-13 Manual Butterfly Valve With C Type Handel

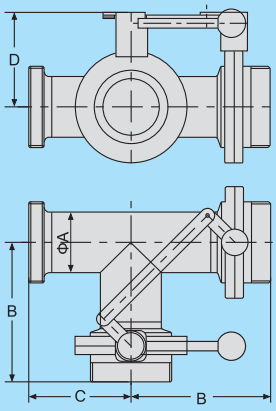

规格size	A	B	C	D	E	F	kg
1s	25.4	92.5	48.5	85			
1.5s	38.1	107.5	68.5	92			
2s	50.8	120.5	80.5	100			
2.5s	63.5	146	107.5	105			
3s	76.1	158.5	112.5	115			
4s	101.6	209.5	157	130			

C型连杆式气动蝶阀 型号type：IDQX-13 Pneumatic Butterfly Valve With C Type Handel

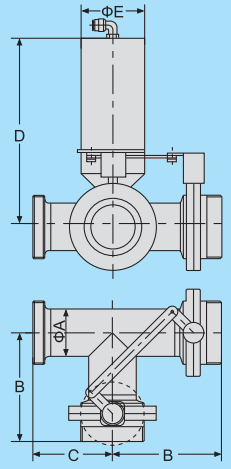

规格size	A	B	C	D	E	F	kg
1s	25.4	92.5	48.5	180	63.5		
1.5s	38.1	107.5	68.5	228	85		
2s	50.8	120.5	80.5	235	85		
2.5s	63.5	146	107.5	245	85		
3s	76.1	158.5	112.5	255	85		
4s	101.6	209.5	157	305	108		

注：信号反馈装置为可以配置选项
Signal feed back device can be choosed or not.

蝶阀阀芯　型号type：DQX-11　Butterfly Valve Plug

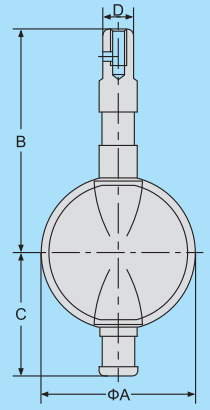

规格size	A	B	C	D	E	F	kg
DN25	25	58.5	30	8×8			
32	31	61.5	32	8×8			
40	38	66	37.5	10×10			
50	50	72.5	44	10×10			
65	66	83	53	10×10			
80	81	92	62	12×12			
100	100	101	71	12×12			
125	125	112	85	14×14			
150	150	125.5	100	14×14			
200	200	159.5	139	16×16			
1^{s}	25	54	28	8×8			
1.25^{s}	25	58.5	28	8×8			
1.5^{s}	35	63.5	35.5	10×10			
2^{s}	48	67.5	42.5	10×10			
2.5^{s}	59.5	79	50	10×10			
3^{s}	72	85.5	57	12×12			

蝶阀密封圈　型号type：DQX-12　Butterfly Valve Gasket

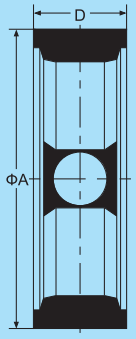

材质Material
标配:三元乙丙橡胶(EPDM)
另选:硅橡胶(SILICON)、氟橡胶(FKM)
氢化丁腈橡胶(HNBR)

规格size	A	B	C	D	E	F	kg
DN25	37	20					0.012
32	43	20					0.014
40	51	21					0.018
50	63.5	21					0.036
65	82	22					0.038
80	97	25					0.054
100	116	25					0.066
125	142	27					0.094
150	170	30					0.146
200	230	38					0.362
1.5^{s}	48	21					0.018
2^{s}	61.5	21					0.024
2.5^{s}	76	22					0.034
3^{s}	88	25					0.048

金属蝶阀手柄　型号type：DQX-13　Metal Handle

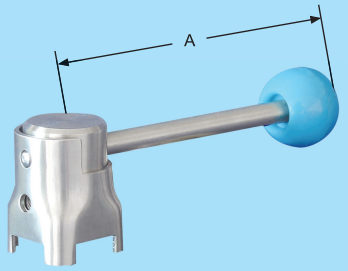

规格size	A	B	C	D	E	F	kg
DN25	120						
32	120						
40	120						
50	120						
65	135						
80	165						
100	165						
125	200						
150	200						
200	230						
1^{s}	120						
1.5^{s}	120						
2^{s}	120						
2.5^{s}	140						
3^{s}	135						
4^{s}	165						

蝶阀配件 Butterfly Valve Parts

齿轮式可调尼龙手柄　型号type：DQX-14　Gear Adjustable Nylon Handle

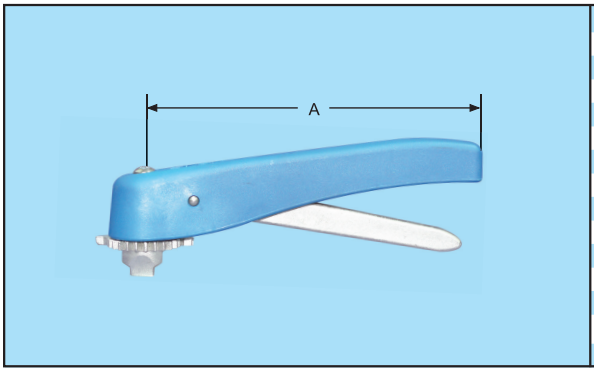

规格size	A	B	C	D	E	F	kg
DN25	166						
32	166						
40	166						
50	166						
65	166						
80	166						
100	166						
1s	166						
1.5s	166						
2s	166						
2.5s	166						
3s	166						
4s	166						

不可调尼龙手柄　型号type：DQX-18　Unadjustable Nylon Handle

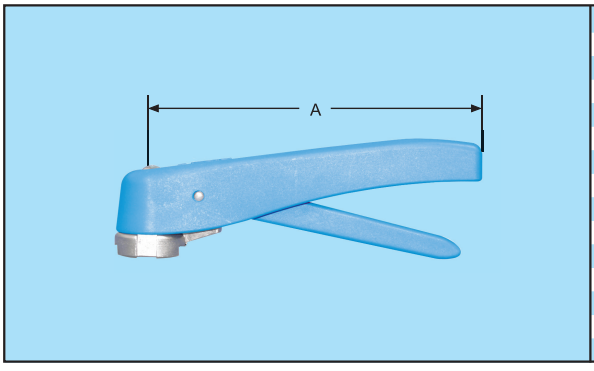

规格size	A	B	C	D	E	F	kg
DN25	166						
32	166						
40	166						
50	166						
65	166						
80	166						
100	166						
1s	166						
1.5s	166						
2s	166						
2.5s	166						
3s	166						
4s	166						

冲压式金属蝶阀手柄　型号type：DQX-17　Stamping Type Metal Butterfly Valve Handle

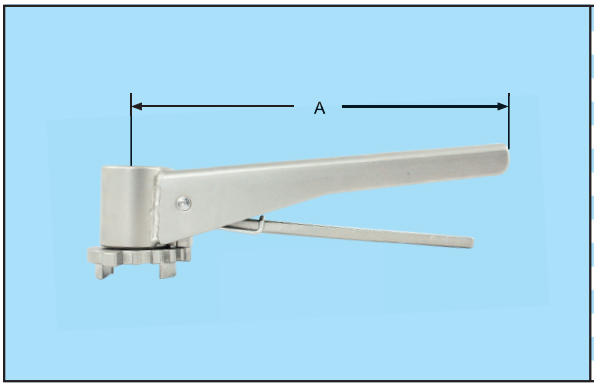

规格size	A	B	C	D	E	F	kg
DN25	175						
32	175						
40	175						
50	175						
65	175						
80	175						
100	175						
1s	175						
1.5s	175						
2s	175						
2.5s	175						
3s	175						
4s	175						

阀芯轴耐磨套　型号type：DQX-16　Wear Resistant Sleeve Of Valve Flap Shift

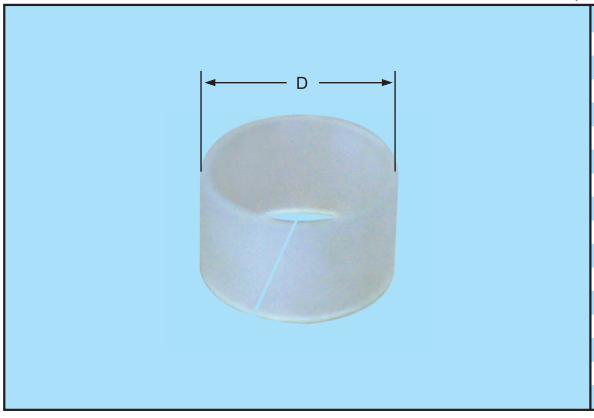

规格size	A	B	C	D	E	F	kg
DN25				9			
32				9			
40				11			
50				11			
65				11			
80				13			
100				13			
125				15			
150				15			
200				17			
1s				9			
1.5s				11			
2s				11			
2.5s				11			
3s				13			
4s				13			

防混蝶阀

应用

卫生级防混蝶阀广泛用于啤酒、饮料、食品制药和精细化工等领域，它最常用于隔离那些需要安全分离的物料以及单组CIP清洗，或者在阀体组件终端。（例如：CIP回程）或者CIP溶液输入到罐内（通过清洗球）。

优点

独特的外观设计、拆卸方便。蝶板的独特设计密封性更好，若有泄露的情况下可检查出泄漏并从排污口排出。阀门有手动或气动可供选择，带智能控制器或接近开关。进口的密封件有较强的耐酸、碱和耐高温的性能，永久压缩变形小。

技术参数

- 口径范围：DN50~DN100 2”~4”
- 最大产品压力：1000Kpa（10bar）
- 最小产品压力：真空
- 温度范围：-10℃至+90℃
- 供给压缩空气：最小4bar 最大8bar

材质

- 与物料接触部分：304或316L
- 表面处理：电解
- 密封件材料：
  标配：EPDM橡胶
  另选：硅橡胶（SILICON）、氟橡胶（FKM）



Mix proof valve

Application

Sanitary mix proof valve is widely used in beer ,beverage, food, pharm and chemical industries. It is best normally used in Isolation those in need of safe separation material and a single set of CIP cleaning, or in the valve body assembly terminal. (for example: CIP backhaul) or CIP medium into the tank (through the cleaning ball)

Advantage

Unique design, convenient disassembly and assembly.The unique design of the disc has the better sealing, if there is leaks ,which can be checked for leaks and discharged from the sewage outfall.Valve have manual and pneumatic for choice , with think top or switch for choice . Import seal has performance of strong acid, alkali and high temperature resistant, small permanent compression deformation

Technical Data

- Size range: DN50~DN100 2”~4”
- Max product pressure: 1000Kpa（10bar）
- Min product pressure: Vacuum
- Temperature range: -10℃ to +90℃
- Compress air: Min 4 bar, MAX 8 bar

Material

- Contacting the medium: 304 or 316L
- Surface: Electrical polish
- Seal: EPDM rubber,Silicon,FKM

防混蝶阀 DIN/ISO Mix Proof Valve

焊式手动防混蝶阀 型号type：DFHDS-01 Welded Mix Proof Valve

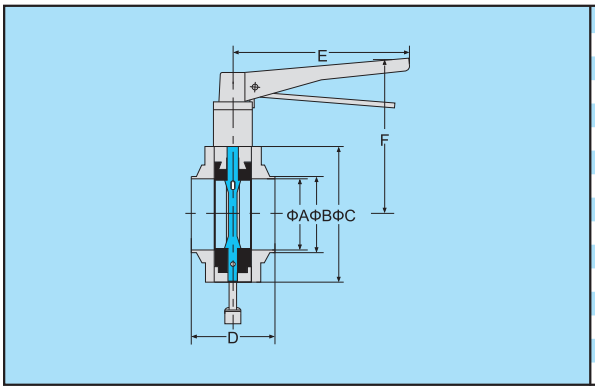

规格size	A	B	C	D	E	F	kg
DN50	49	52	110	86	175	120	
65	66	70	130	86	175	130	
80	81	85	145	89	175	140	
100	100	104	165	89	175	150	

焊式气动防混蝶阀 型号type：DFHDQ-01 Welded Pneumatic Mix Proof Valve

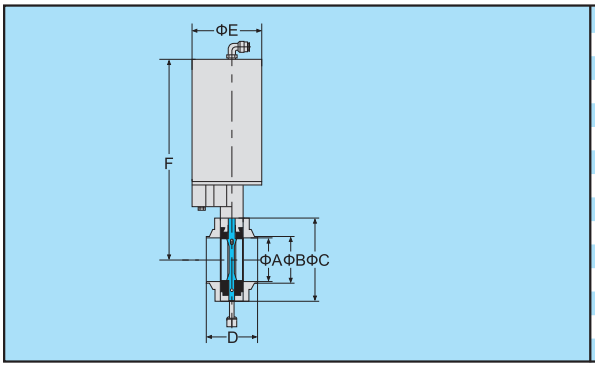

规格size	A	B	C	D	E	F	kg
DN50	49	52	110	86	85	250	
65	66	70	130	86	85	260	
80	81	85	145	89	108	290	
100	100	104	165	89	108	310	

注：信号反馈装置为可以配置选项
Signal feed back device can be choosed or not.

焊式手动防混蝶阀 型号type：IFHDS-01 Welded Mix Proof Valve

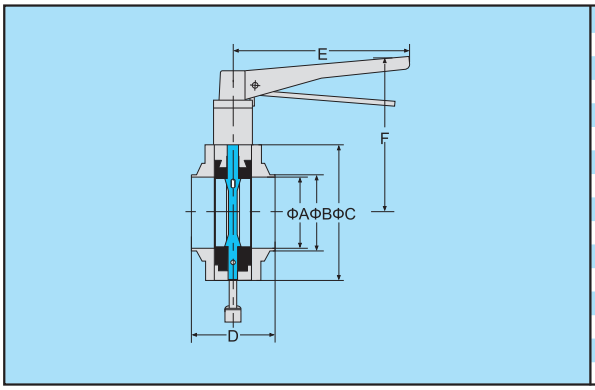

规格size	A	B	C	D	E	F	kg
2^{s}	47.8	50.8	110	86	175	120	
2.5^{s}	59.5	63.5	125	86	175	128	
3^{s}	72.1	76.1	138	89	175	137	
4^{s}	97.6	101.6	165	89	175	150	

焊式气动防混蝶阀 型号type：IFHDQ-01 Welded Pneumatic Mix Proof Valve

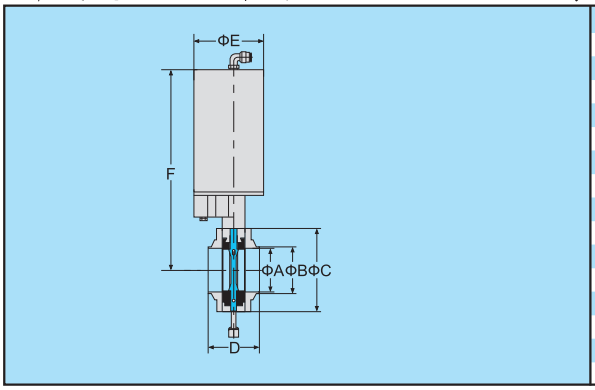

规格size	A	B	C	D	E	F	kg
2^{s}	47.8	50.8	110	86	85	250	
2.5^{s}	59.5	63.5	125	86	85	258	
3^{s}	72.1	76.1	138	89	108	287	
4^{s}	97.6	101.6	165	89	108	310	

注：信号反馈装置为可以配置选项
Signal feed back device can be choosed or not.

样本所示管径为DIN11850第一系列尺寸，可按客户要求提供第二系列尺寸的产品。
The sizes marked in the handbook is DIN11850 NO.1 serie, No.2 serie products can also be offered by LYSF.